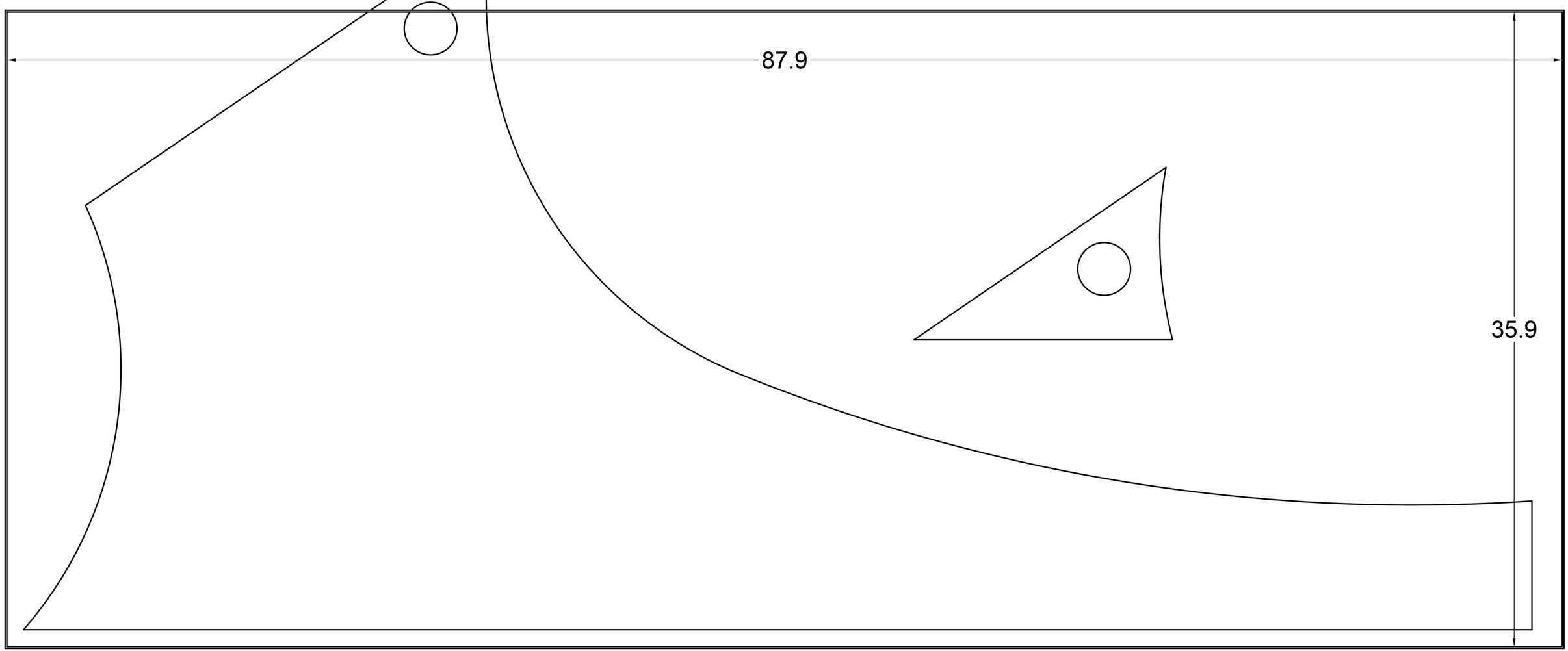
87.9
35.9